BAVARIA CRUISER 33

Salsa

Le voilier Bavaria Cruiser 33 „Salsa“, construit en 2016, est amarré à Marina Zadar (ex. Tankerkomerc), Zadar - Croatie. Le yacht dispose de 2 cabines, peut accueillir 4 + 2 personnes et possède 1 toilettes/douches.



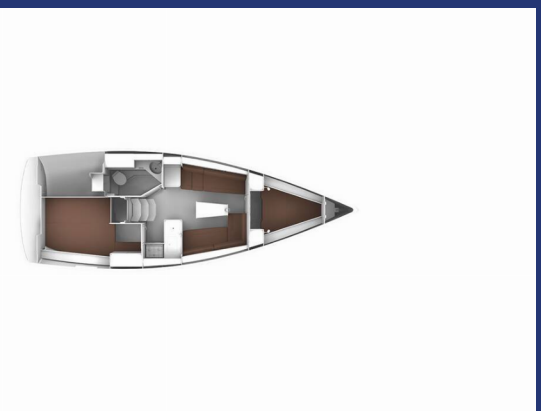

CARACTÉRISTIQUES DU YACHT

Base De Location
Marina Zadar (ex. Tankerkomerc), Croatie

Yacht ID
75

Marque
Bavaria Yachtbau

Nom
Salsa

Année De Production
2016

Longueur
9.99 m

Cabins
2

Couchages
4 + 2

Max. Passagers
6

Toilettes/Douche
1

ÉQUIPEMENT STANDARD DU YACHT

Comfort	Bed linen, Blankets, Cockpit cushions, Pillows
Deck	Anchor Jambo (16 kg), Anchor swivel, Bathing platform, Bimini top (New / May 2026), Black ball, Black conus, Boat hook, Bosun's chair (Safe seat) (boatswain's chair), Canister for water (20L), Cockpit table, Cockpit/stern, outside shower, Dinghy, Dinghy (byboat) pump, Electric anchor windlass (Lewmar PRO SERIE 700 W / NEW June 2026), Fenders, Gangway, Hawser (50m), Impeller, V-belt, oilfilter, Jerry cans for fuel (20L), Main anchor (+ chain), Mooring ropes (15m), Outboard engine (Honda 2,3 HP / NEW June 2026), Plastic bucket, Repair box for dinghy, Round/globular fender, Spare anchor (Reserve, Auxiliary anchor), Spotlight / Headlights, Sprayhood (New / May 2026), Spring line (25m), Teak cockpit, Water hose (25m)
Entertainment	Outdoor speakers, Radio (CD)
Galley	Gas bottles, Hot water, Ice box, Kitchen utensils (Galley equipment, cutlery)
Interior	Barometer, Clock, Inside shower, Lowerable salon table
Navigation	Autopilot (Garmin GMI 20 Bundle), GPS chart plotter - cockpit (Garmin GPSMap 721), Harbour guides, Logge/Lot/Speed/Wind (Garmin GMI 20 Bundle), Nautical charts, Navigation set, Radar reflector, Spyglass with bearing compass, Windex
Safety	Distress flare box, Fire extinguisher, First aid kit, Flashlight, Fog horn, Life buoy + Flashing light, Liferaft, Self inflating life vest, Set of tools, VHF radio (DSC), Wire (shroud) cutter
Yacht electrics	Battery charger, Heating, Inverter (Waeco 350 Watt), Shore connection 220 V, Solar panels (PHOTOVOLTAIC / NEW 2025: 2x 150 W)

PRICE / WEEKS

01.01. - 19.03.2027 Réservé	**20.03. - 27.03.2027** 616 € ~~770 €~~	**27.03. - 03.04.2027** 616 € ~~770 €~~	**03.04. - 10.04.2027** 616 € ~~770 €~~
10.04. - 17.04.2027 616 € ~~770 €~~	**17.04. - 24.04.2027** 678 € ~~847 €~~	**24.04. - 01.05.2027** 678 € ~~847 €~~	**01.05. - 08.05.2027** Réservé
08.05. - 15.05.2027 Réservé	**15.05. - 22.05.2027** 986 € ~~1.233 €~~	**22.05. - 29.05.2027** 1.089 € ~~1.361 €~~	**29.05. - 12.06.2027** Réservé



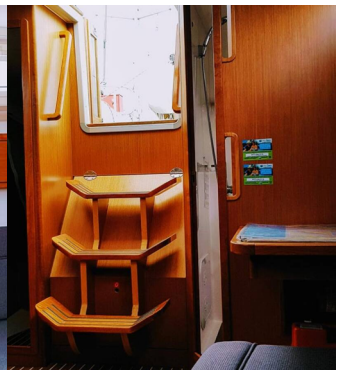

WEB
www.suncharter.de

TÉLÉPHONE
+49 (0)8171 299 05

ADRESSE E-MAIL
info@suncharter.de

SUN CHARTER
Chiemseestraße 65, D-83233, Wolfratshausen, Allemagne

SUNCHARTER
Est. 1982

PRICE / WEEKS

12.06. - 19.06.2027 En option	**19.06. - 26.06.2027** Réservé	**26.06. - 03.07.2027** Réservé	**03.07. - 10.07.2027** 1.685 € ~~2.106 €~~
10.07. - 17.07.2027 Réservé	**17.07. - 24.07.2027** 1.849 € ~~2.311 €~~	**24.07. - 31.07.2027** 1.849 € ~~2.311 €~~	**31.07. - 07.08.2027** 1.849 € ~~2.311 €~~
07.08. - 14.08.2027 1.849 € ~~2.311 €~~	**14.08. - 21.08.2027** 1.849 € ~~2.311 €~~	**21.08. - 28.08.2027** 1.746 € ~~2.183 €~~	**28.08. - 04.09.2027** 1.746 € ~~2.183 €~~
04.09. - 11.09.2027 1.582 € ~~1.977 €~~	**11.09. - 18.09.2027** 1.582 € ~~1.977 €~~	**18.09. - 25.09.2027** 1.479 € ~~1.849 €~~	**25.09. - 02.10.2027** 1.377 € ~~1.721 €~~
02.10. - 09.10.2027 1.274 € ~~1.592 €~~	**09.10. - 16.10.2027** 1.171 € ~~1.464 €~~	**16.10. - 23.10.2027** 1.027 € ~~1.284 €~~	**23.10. - 30.10.2027** 925 € ~~1.156 €~~
30.10. - 06.11.2027 822 € ~~1.027 €~~	**06.11. - 13.11.2027** 719 € ~~899 €~~	**20.11. - 31.12.2027** Réservé	



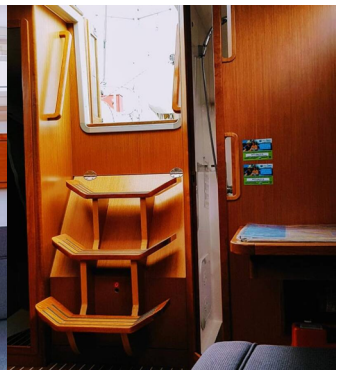

WEB
www.suncharter.de

TÉLÉPHONE
+49 (0)8171 299 05

ADRESSE E-MAIL
info@suncharter.de

SUN CHARTER
Chiemseestraße 65, D-83233, Wolfratshausen, Allemagne

SUNCHARTER
Est. 1982