BAVARIA CRUISER 33

Salsa

El Velero Bavaria Cruiser 33 „Salsa“, construido en 2016, está amarrado en Marina Zadar (ex. Tankerkomerc), Zadar - Croacia. El yate cuenta con 2 cabinas, puede alojar a 4 + 2 personas y dispone de 1 baños/duchas.



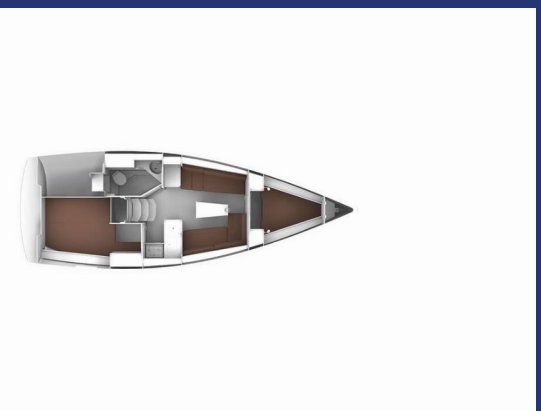

ESPECIFICACIONES DEL YATE

Base De Charter
Marina Zadar (ex. Tankerkomerc), Croacia

Yacht ID
75

Marca
Bavaria Yachtbau

Nombre
Salsa

Año De Producción
2016

Longitud
9.99 m

Cabins
2

Literas
4 + 2

Máx. Pasajeros
6

Baño/Ducha
1

EQUIPAMIENTO ESTÁNDAR DEL YATE

Comfort	Bed linen, Blankets, Cockpit cushions, Pillows
Deck	Anchor Jambo (16 kg), Anchor swivel, Bathing platform, Bimini top (New / May 2026), Black ball, Black conus, Boat hook, Bosun's chair (Safe seat) (boatswain's chair), Canister for water (20L), Cockpit table, Cockpit/stern, outside shower, Dinghy, Dinghy (byboat) pump, Electric anchor windlass (Lewmar PRO SERIE 700 W / NEW June 2026), Fenders, Gangway, Hawser (50m), Impeller, V-belt, oilfilter, Jerry cans for fuel (20L), Main anchor (+ chain), Mooring ropes (15m), Outboard engine (Honda 2,3 HP / NEW June 2026), Plastic bucket, Repair box for dinghy, Round/globular fender, Spare anchor (Reserve, Auxiliary anchor), Spotlight / Headlights, Sprayhood (New / May 2026), Spring line (25m), Teak cockpit, Water hose (25m)
Entertainment	Outdoor speakers, Radio (CD)
Galley	Gas bottles, Hot water, Ice box, Kitchen utensils (Galley equipment, cutlery)
Interior	Barometer, Clock, Inside shower, Lowerable salon table
Navigation	Autopilot (Garmin GMI 20 Bundle), GPS chart plotter - cockpit (Garmin GPSMap 721), Harbour guides, Logge/Lot/Speed/Wind (Garmin GMI 20 Bundle), Nautical charts, Navigation set, Radar reflector, Spyglass with bearing compass, Windex
Safety	Distress flare box, Fire extinguisher, First aid kit, Flashlight, Fog horn, Life buoy + Flashing light, Liferaft, Self inflating life vest, Set of tools, VHF radio (DSC), Wire (shroud) cutter
Yacht electrics	Battery charger, Heating, Inverter (Waeco 350 Watt), Shore connection 220 V, Solar panels (PHOTOVOLTAIC / NEW 2025: 2x 150 W)

PRICE / WEEKS

01.01. - 19.03.2027 Reservado	**20.03. - 27.03.2027** 616 € ~~770 €~~	**27.03. - 03.04.2027** 616 € ~~770 €~~	**03.04. - 10.04.2027** 616 € ~~770 €~~
10.04. - 17.04.2027 616 € ~~770 €~~	**17.04. - 24.04.2027** 678 € ~~847 €~~	**24.04. - 01.05.2027** 678 € ~~847 €~~	**01.05. - 08.05.2027** Reservado
08.05. - 15.05.2027 Reservado	**15.05. - 22.05.2027** 986 € ~~1.233 €~~	**22.05. - 29.05.2027** 1.089 € ~~1.361 €~~	**29.05. - 12.06.2027** Reservado



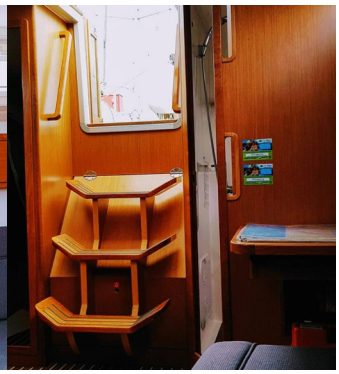

WEB
www.suncharter.de

TELÉFONO
+49 (0)8171 299 05

DIRECCIÓN DE CORREO ELECTRÓNICO
info@suncharter.de

SUN CHARTER
Chiemseestraße 65, D-83233, Wolfratshausen, Alemania

SUNCHARTER
Est. 1982

PRICE / WEEKS

12.06. - 19.06.2027 En opción	**19.06. - 26.06.2027** Reservado	**26.06. - 03.07.2027** Reservado	**03.07. - 10.07.2027** 1.685 € ~~2.106 €~~
10.07. - 17.07.2027 Reservado	**17.07. - 24.07.2027** 1.849 € ~~2.311 €~~	**24.07. - 31.07.2027** 1.849 € ~~2.311 €~~	**31.07. - 07.08.2027** 1.849 € ~~2.311 €~~
07.08. - 14.08.2027 1.849 € ~~2.311 €~~	**14.08. - 21.08.2027** 1.849 € ~~2.311 €~~	**21.08. - 28.08.2027** 1.746 € ~~2.183 €~~	**28.08. - 04.09.2027** 1.746 € ~~2.183 €~~
04.09. - 11.09.2027 1.582 € ~~1.977 €~~	**11.09. - 18.09.2027** 1.582 € ~~1.977 €~~	**18.09. - 25.09.2027** 1.479 € ~~1.849 €~~	**25.09. - 02.10.2027** 1.377 € ~~1.721 €~~
02.10. - 09.10.2027 1.274 € ~~1.592 €~~	**09.10. - 16.10.2027** 1.171 € ~~1.464 €~~	**16.10. - 23.10.2027** 1.027 € ~~1.284 €~~	**23.10. - 30.10.2027** 925 € ~~1.156 €~~
30.10. - 06.11.2027 822 € ~~1.027 €~~	**06.11. - 13.11.2027** 719 € ~~899 €~~	**20.11. - 31.12.2027** Reservado	



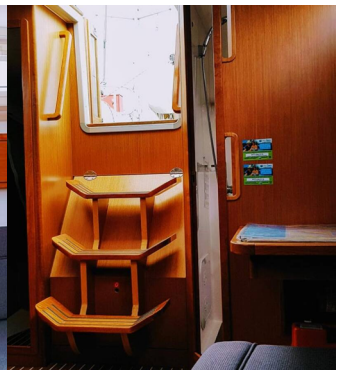

WEB
www.suncharter.de

TELÉFONO
+49 (0)8171 299 05

DIRECCIÓN DE CORREO ELECTRÓNICO
info@suncharter.de

SUN CHARTER
Chiemseestraße 65, D-83233, Wolfratshausen, Alemania

SUNCHARTER
Est. 1982